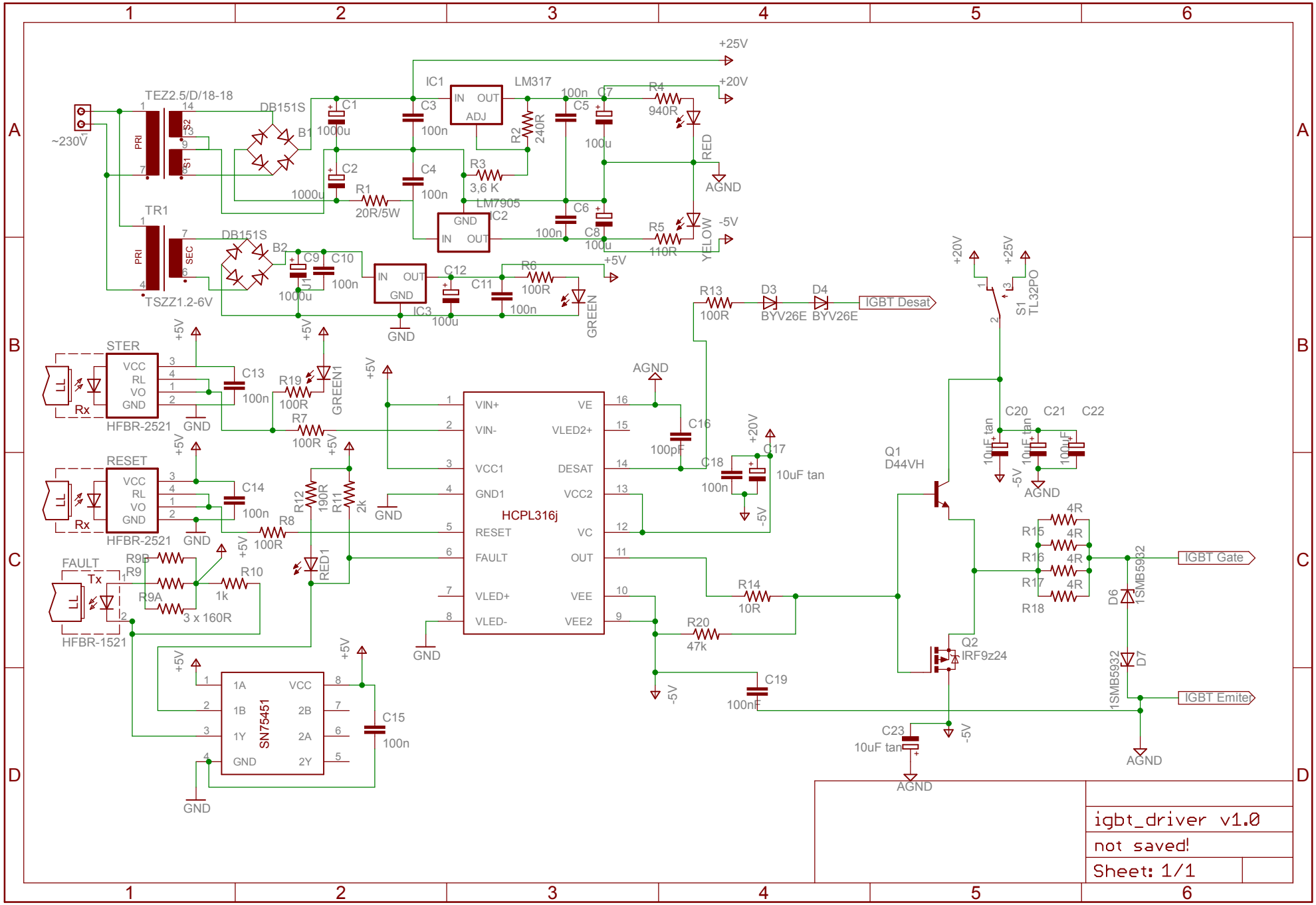


igbt_driver v1.0

not saved!

Sheet: 1/1