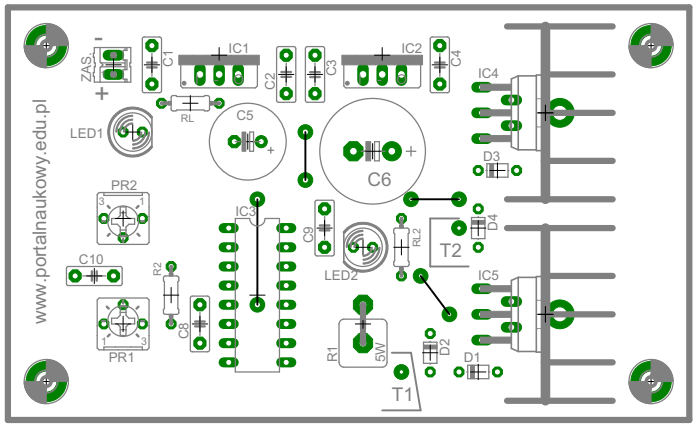
www.portalnaukowy.edu.pl
ZAS1
C1
IC1
C2
C3
IC2
C4
IC4
RL
C5
LED1
C6
D3
PR2
IC3
C9
RL2
T2
D4
C10
R2
LED2
IC5
C8
PR1
R1
5V
D2
D1
T1